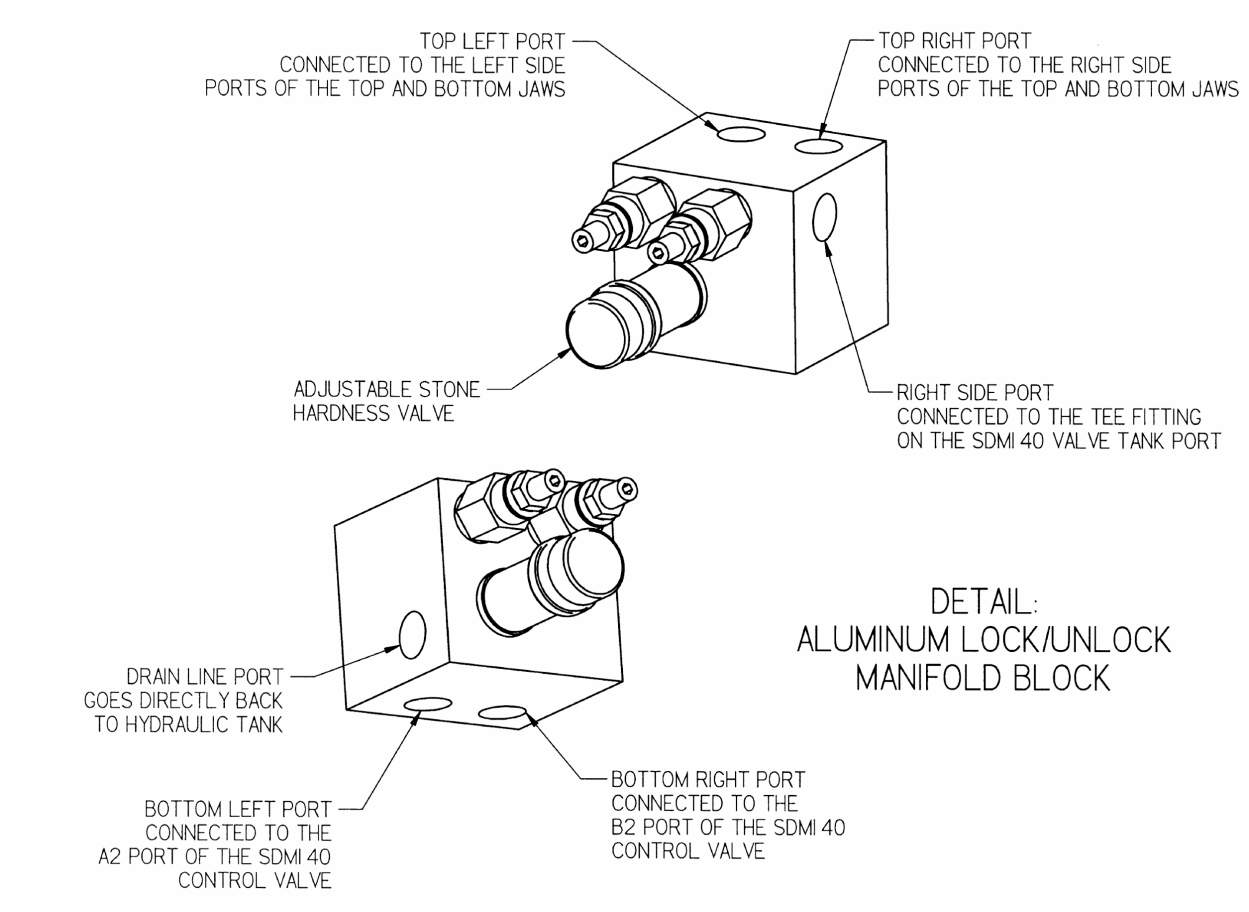LOCK/UNLOCK BLOCK # 19